01.1 PORT LOCATION MAP
SCALE 1:NTS METERS

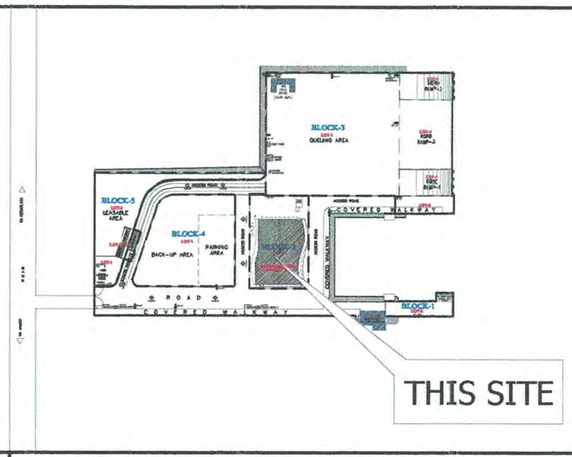

01.2 LOCATION PLAN
SCALE 1:2000 METERS

ITEM NO.	WORK DESCRIPTION	ITEM NO.	WORK DESCRIPTION
2.01	SUPPLY FOR LABOR, MATERIAL AND EQUIPMENT FOR MANUAL AND MECHANICAL CLEANING (POWER SPRAY AND SANDING) TO REMOVE EXISTING PAINT, DIRT, CEMENT FLAKES, AND OTHER FOREIGN MATTERS	2.04	SUPPLY FOR LABOR, MATERIAL AND EQUIPMENT FOR THE APPLICATION OF TWO (2) COATS OF CRYSTALLINE WATERPROOFING COATING AND CONCRETE LEVELLING
2.02	SUPPLY FOR LABOR, MATERIAL AND EQUIPMENT FOR MECHANICAL PREPARATION OF ALL CRACKS (BEVELED) FOR SEALING AND PATCHING	2.05	SUPPLY FOR LABOR, MATERIAL AND EQUIPMENT FOR THE APPLICATION OF TWO (2) COATS OF PROTECTIVE TOPCOAT
2.03	SUPPLY FOR LABOR, MATERIAL AND EQUIPMENT FOR SEALING AND PATCHING OF CRACKS AND FIRST COATING APPLICATION OF PENETRATING WATERPROOFING		

01.3 WORK DESCRIPTION
SCALE 1:NTS METERS

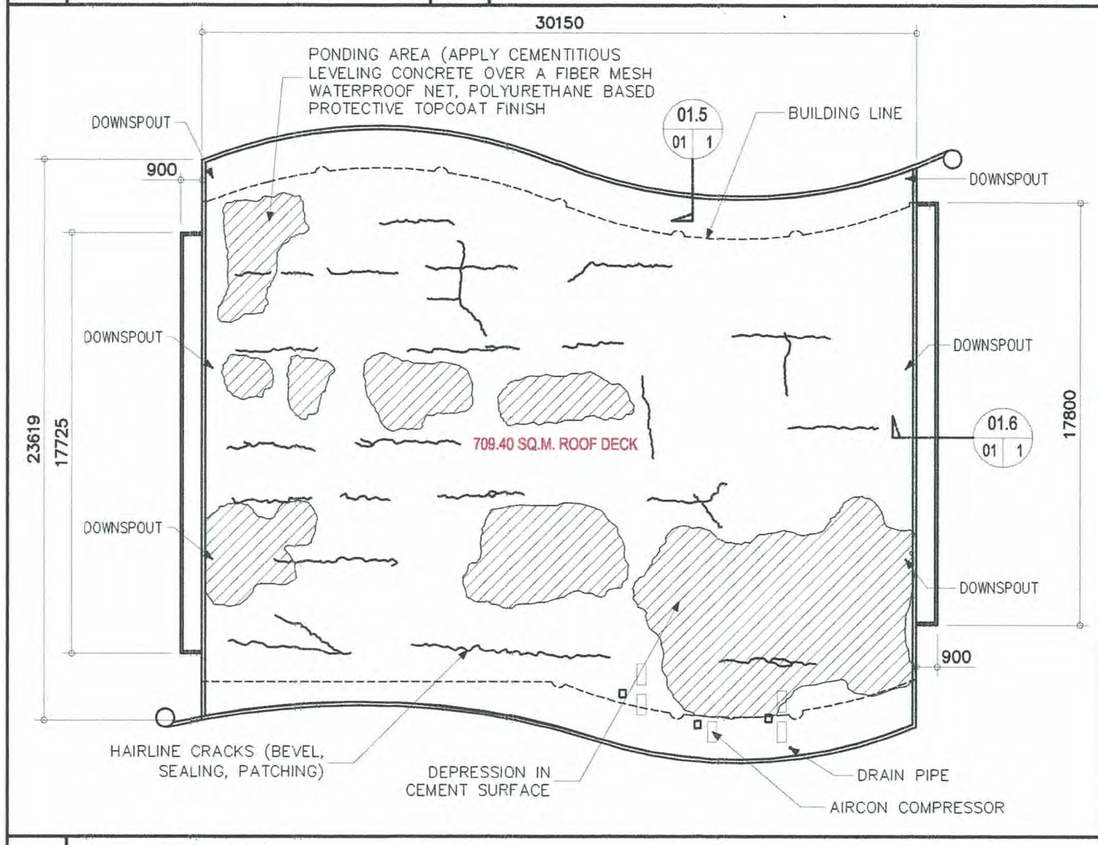

01.4 ROOF DECK PLAN
SCALE 1:250 METERS

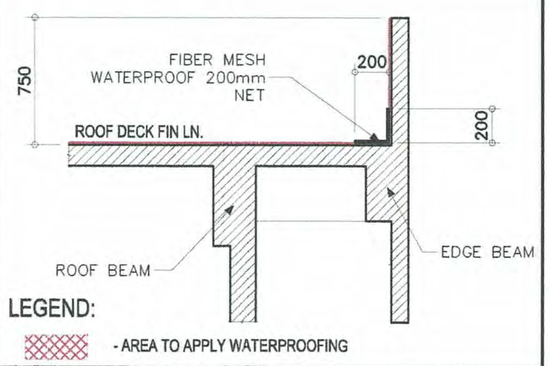

01.5 PARAPET SECTION
SCALE 1:35 METERS

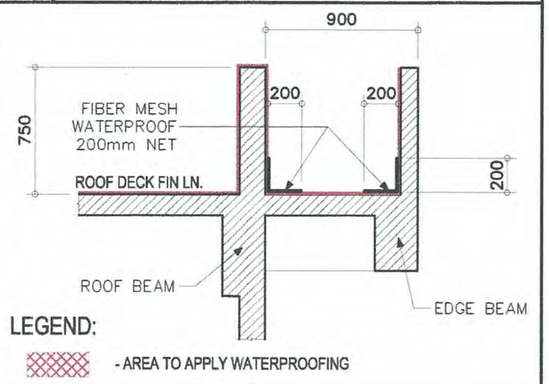

01.6 CANOPY SECTION
SCALE 1:35 METERS

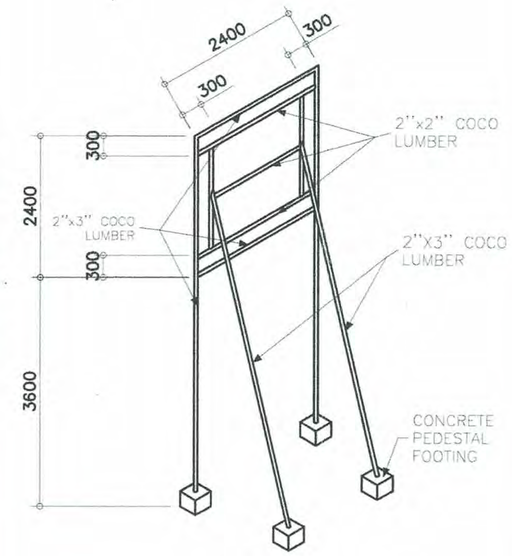

01.7 COA BILLBOARD FRAMING DETAIL
SCALE 1:100 METERS

PHILIPPINE PORTS AUTHORITY PMO DAVAO

PREPARED BY:	CHECKED AND REVIEWED BY:	RECOMMENDING APPROVAL BY:	APROVED BY:
KENNTEH JOHN B. REMOLADOR ARCHITECT II	CARLOU DEVIN U. CAFE SENIOR ENGINEER A	LARA SIMONE L. ABA ACTING HSD MANAGER	ANALEE G. AGUILA PORT MANAGER

OWNER: ANALEE G. AGUILA, PORT MANAGER

SHEET CONTENTS: PORT LOCATION MAP / LOCATION PLAN / WORK DESCRIPTION / ROOF DECK PLAN / PARAPET SECTION / CANOPY SECTION / COA BILLBOARD FRAMING DETAIL

PROJECT TITLE: MAINTENANCE OF ROOF DECK OF PORT OPERATIONS BUILDING BABAK PORT, BABAK DISTRICT, IGACOS, DAVALO DEL NORTE

LOCATION: BABAK, IGACOS, DAVAO DEL NORTE

REVISIONS	
DATE	REMARKS
ADDENDUM	

NO.	-
PROJECT	-
DATE	-
DRAWN	-

SHEET NO. A1 OF 01

CADD BY: VAJ
DATE DRAWN: 3/24/26
DATE UPDATED: MM/DD/YY

DRAWING AND SPECIFICATION DULY SIGNED, STAMPED OR SEALED AS INSTRUMENTS OF SERVICES ARE THE PROPERTY OF THE ARCHITECT, WHETHER THE OBJECTS FOR WHICH THEY ARE MADE IS EXECUTED OR NOT. IT SHALL BE UNLAWFUL FOR ANY PERSON WITHOUT THE WRITTEN CONSENT OF THE ARCHITECT OF THE SAID DOCUMENTS TO DUPLICATE OR TO MAKE COPIES OF THE SAID DOCUMENTS FOR USE IN REPETITION OF AND FOR PROJECTS OR BUILDINGS WHETHER PARTLY OR WHOLELY EXECUTED. R.A.545 SECTION 25(4)